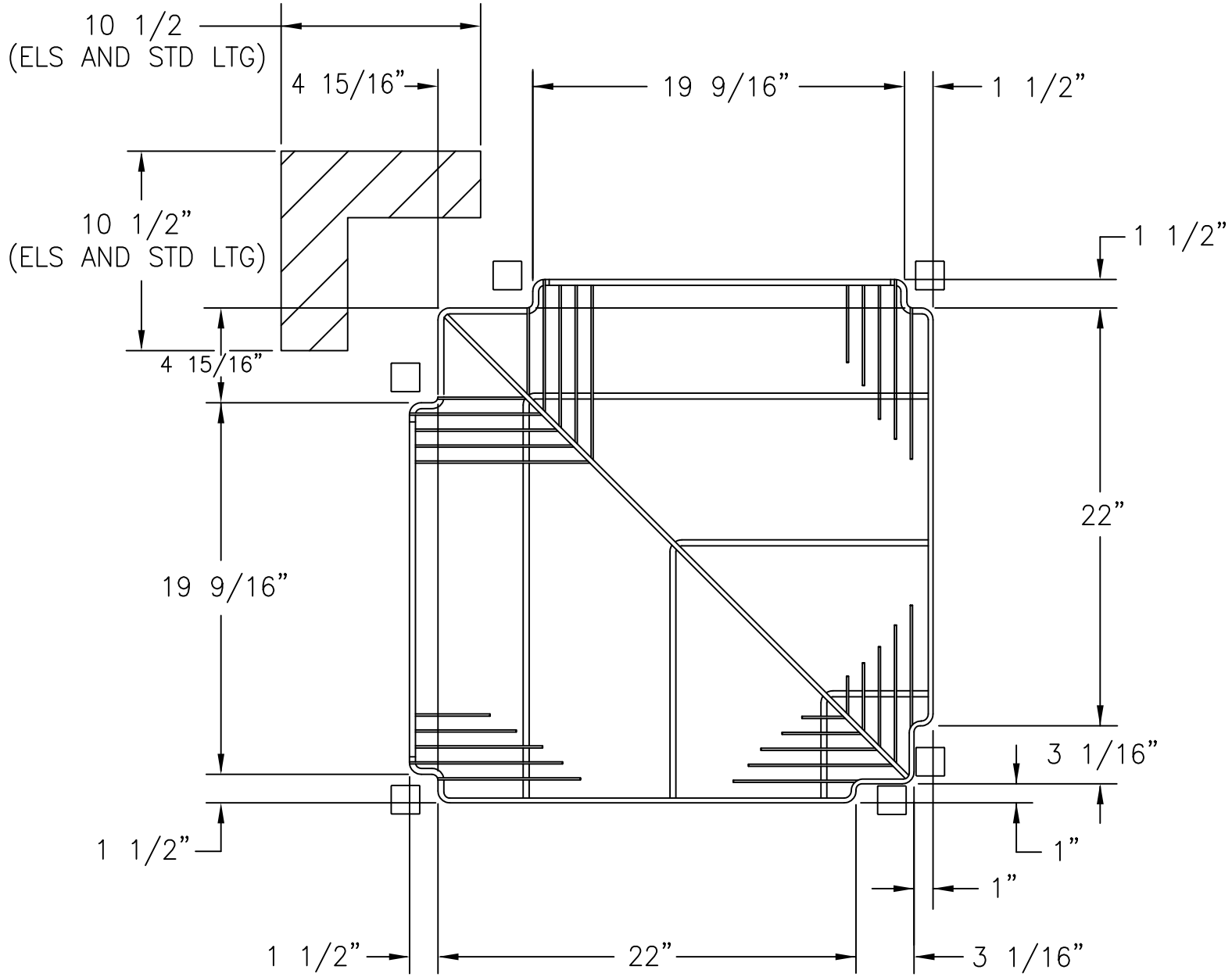

MODEL 101,210X, ELM

24" DOOR

85-12051-00001