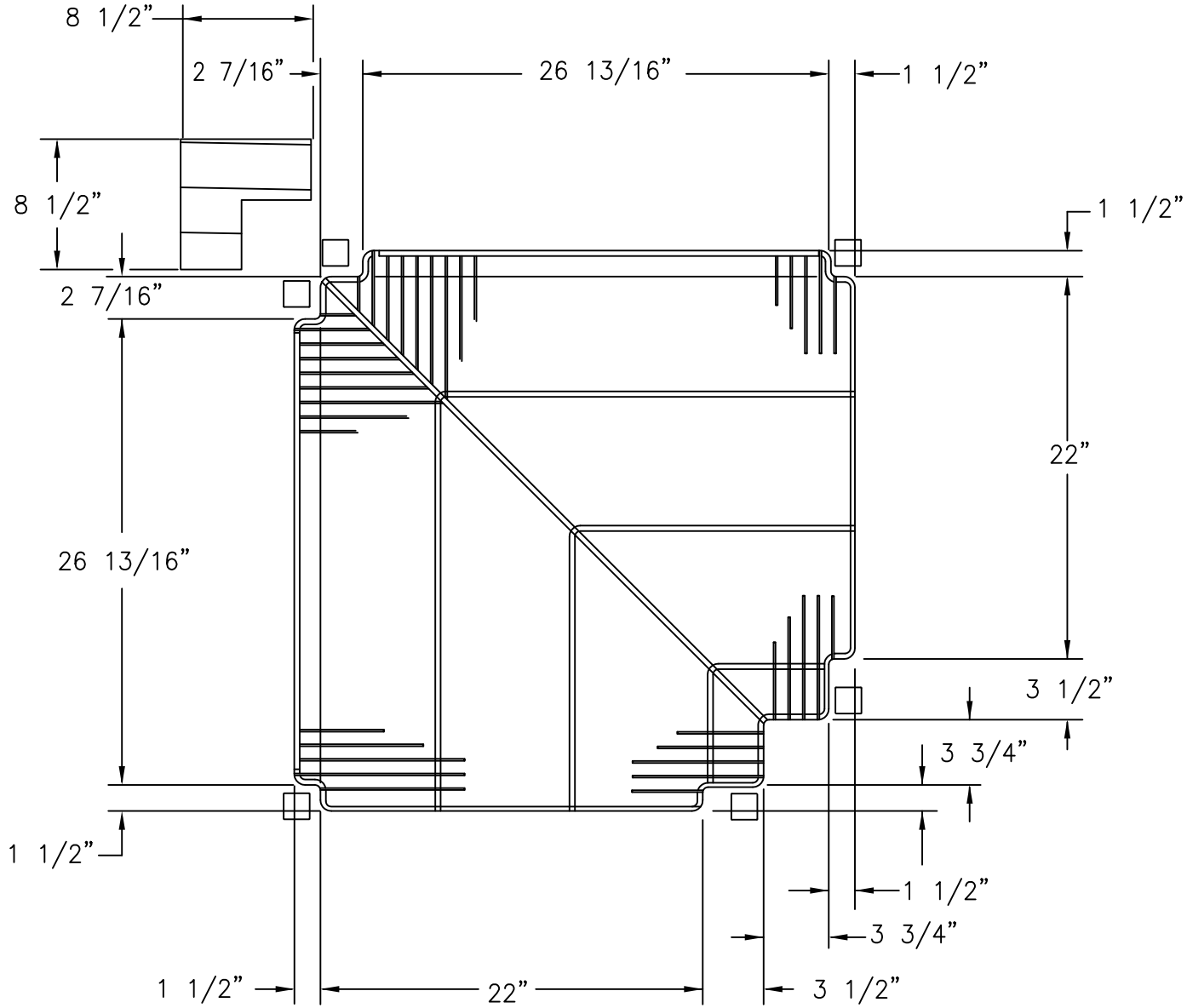

MODEL 101,210X, ELM

30" DOOR

85-12047-00001